ADD: 4th Building,Meitai Technology Park,Guanguang Road,Longhua,Shenzhen,China.518110

free-maintenance battery Technology Specification

Customer _____

Part name free-maintenance battery

Model No PK-12120C （12V12AH）

Serial No _____

Produce No _____

Approved by		**Drafted by**	WenFei Liang
Checked by		**Signed by**	Xiaojun nie
Prepared by		**Valid Date**	2018-10-31

Company address: 4th Building,Meitai Technology Park,Guanguang Road,Longhua,Shenzhen,China

（Tel）： +86-755-86670672
（Fax）： +86-755-86670609
E-mail： pkcell@pkcell.net pkcell@pkcell.com
Website： http://www.pkcell.net http://www.pkcell.com

ADD: 4th Building,Meitai Technology Park,Guanguang Road,Longhua,Shenzhen,China.518110

free-maintenance battery

PK-12120C [12V12AH]



• Outer dimensions(mm)

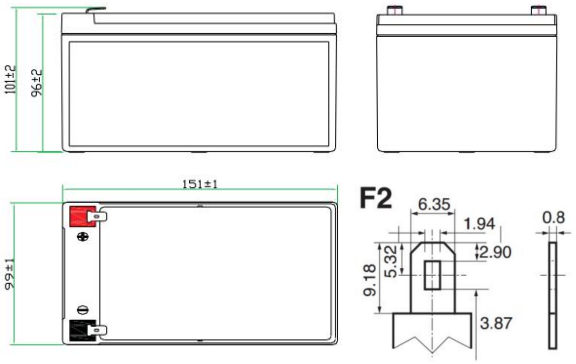

Specification

Nominal voltage		**12V**	**Rate Capacity (20 hour rate)**	**12AH**
Dimensions ±1mm	**Length** **Width** **Height** **Total Height** **(With Terminals)**	**151mm 5.94 in.** **99mm 3.90 in** **96mm 3.78 in.** **101mm 3.98 in.**	**Weight Approx**	**3650g**
			Standard Terminal	**F2**
			Optional Terminal	**N/A**

• Discharge Characteristics(25℃/77F°)

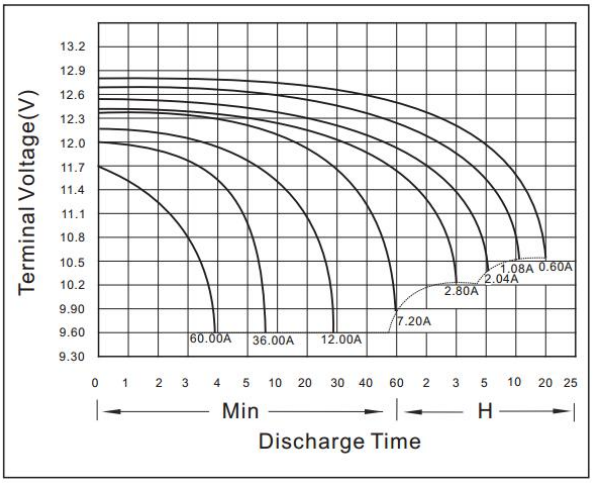

Electrical Specifications

Capacity 77° F(25℃)	20 hour rate(0.6A)	12AH	Internal Resistance	30mΩ
	10 hour rate(1.08A)	10.8AH		
	5 hour rate(2.04A)	10.2AH	Full charged battery	
	1 hour rate(7.2A)	7.2AH		
Capacity Affected by Temperature (20hour rate)	104° F(40℃)	102%	Self-discharge 77 °F(25℃)	Capacity after 1 month storage 90%
	77° F(25℃)	100%		Capacity after 3 month storage 75%
	32° F(0℃)	80%		Capacity after 6 month storage 65%
	5° F(-15℃)	50%		Capacity after 12 month storage 55%
Charge Constant Voltage	Cycle use: Initial Charging Current less than 3.60A; Voltage 14.20~15.00V 77° F(25℃) Standby use: Voltage 13.50~13.80V 77° F(25℃)			

Temperature Effects in Relation to Battery Capacity

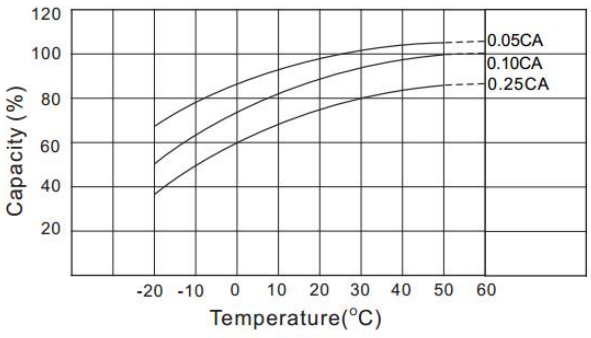

If manufacturer want to modify the product technology specification, we won't inform you additionally)